OmniStream 111 Single-Channel Networked AV Encoder

AT-OMNI-111

The Atlona **AT-OMNI-111** is a networked AV encoder for HDMI sources up to 4K/60 4:4:4 and HDR (High Dynamic Range), plus embedded audio and RS-232 or IR control pass-through. OmniStream is designed for high performance, flexible distribution of AV over standard, off-the-shelf Gigabit Ethernet switches in commercial audiovisual applications. The OMNI-111 encoder features the advanced VCx™ codec which delivers 4K/60 4:4:4 video from encode to decode, with artifact-free presentation of computer-generated content and fast-motion video, and ultra-low latency less than one frame. VCx offers high-efficiency coding with simultaneous 4K/60 4:4:4 and 1080p streaming through dual encoders and scaling engines built into the OMNI-111. This encoder is housed in a half-width rack enclosure with front-to-back air flow, and is ideal for high-density, compact installation in a centralized equipment location.

Package Contents

1 x AT-OMNI-111
1 x Push spring connector, 6-pin
1 x Wall/table mounting brackets
4 x Rubber feet

Operating Notes

- OmniStream uses mDNS as the discovery mechanism. In order for mDNS to function properly, there must not be restrictions applied to the network.

IMPORTANT: Visit http://www.atlona.com/product/AT-OMNI-111 for the latest firmware updates and User Manual.

Panel Descriptions

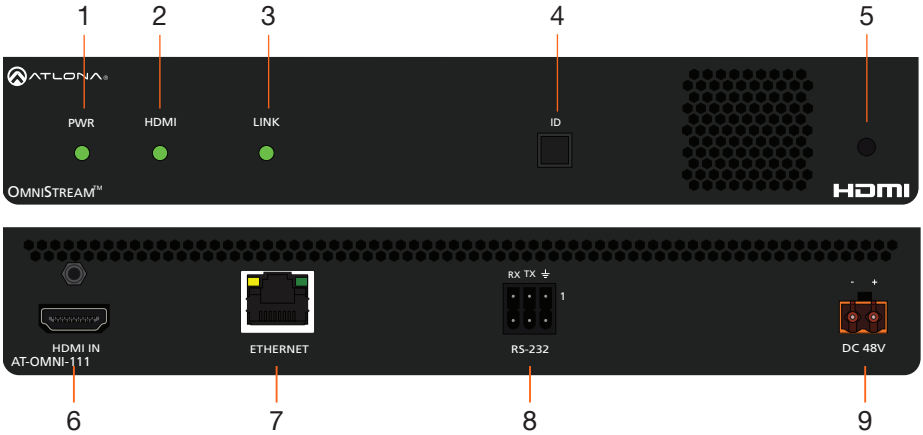

1 PWR
This LED indicator is green when the unit is powered and fully booted.

2 HDMI
This LED indicator is green when the link between source and encoder is good.

3 LINK
This LED indicator is green when the link integrity between the encoder and the network switch is good.

4 ID
This button provides two functions:
(1) Press and release this button to send a broadcast network notification to any devices that may be listening (Velocity).
(2) Press and hold this button for 30 seconds to perform a factory-reset of the unit. Refer to the OmniStream Encoder User Manual for more information.

5 REBOOT
Use a small, pointed object to press this recessed button and reboot the unit.

6 HDMI IN
Connect an HDMI cable from this port to a UHD/HD source.

7 ETHERNET
Connect an Ethernet cable from this port to the Local Area Network (LAN).

8 RS-232
Use the included push-spring connector to connect an RS-232 device to this port. Refer to **RS-232** on page 5 for more information.

9 DC 48V
Connect the optional 48V DC power supply to this power receptacle. This power supply is available, separately, and is required when connecting the encoder to non-PoE compatible switch.

Mounting Instructions

The AT-OMNI-111 encoder includes two mounting brackets and four mounting screws, which can be used to attach the unit to any flat surface.

1. Using a small Phillips screwdriver, remove the two screws from the left side of the enclosure.

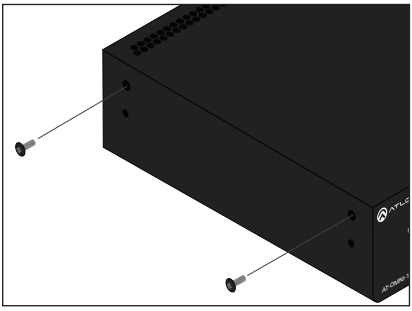

2. Position one of the mounting brackets, as shown below, aligning the holes on the side of the enclosure with one set of holes on the mounting bracket.
3. Use the enclosure screws to secure the mounting bracket to the enclosure.

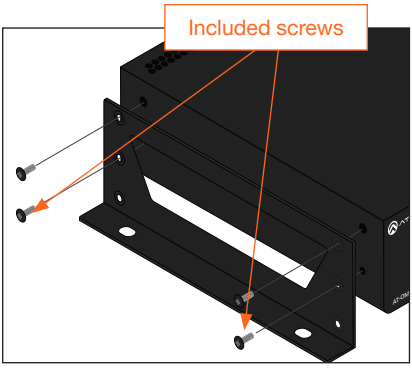

4. To provide added stability to the mounting bracket, use two of the included screws and attach them to the two holes, directly below the enclosure screws, as shown above.
5. Repeat steps 1 through 4 to attach the second mounting bracket to the opposite side of the unit.
6. Mount the unit using the oval-shaped holes, on each mounting bracket. If using a drywall surface, a #6 drywall screw is recommended.

NOTE: Mounting brackets can also be inverted to mount the unit under a table or other flat surface.

Installation

1. Connect an Ethernet cable from the **ETHERNET** port on the encoder to a PoE-capable switch on the Local Area Network (LAN). Note that if a PoE-capable switch is not available, the 48V DC power supply (sold separately) must be connected to the encoder.
2. Connect an HDMI cable from a UHD/HD source to the **HDMI** port on the encoder.
3. If using RS-232, connect the included 6-pin Euroblock push-spring connector to the **RS-232** port on the encoder.
4. The **PWR** indicator, on the front panel, displays the power status of the encoder. When the encoder is powered, using either PoE or the optional 48V DC power supply (not included), the LED initially turns red. After a few moments it will turn amber, and finally green.

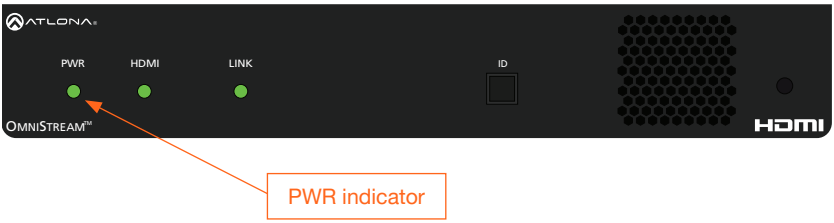

Power Supply (optional)

The AT-OMNI-111 is powered by PoE (Power over Ethernet), when connected to a PoE-capable switch. If a PoE-switch is not used, then the optional 48 V power supply (Atlona part no. AT-PS-48083-C) can be purchased, separately. Insert the positive and negative leads, from the power supply, into the terminals of the 2-pin captive screw connector block, as shown. The orange 2-pin captive screw connector block is included with the OmniStream power supply package.

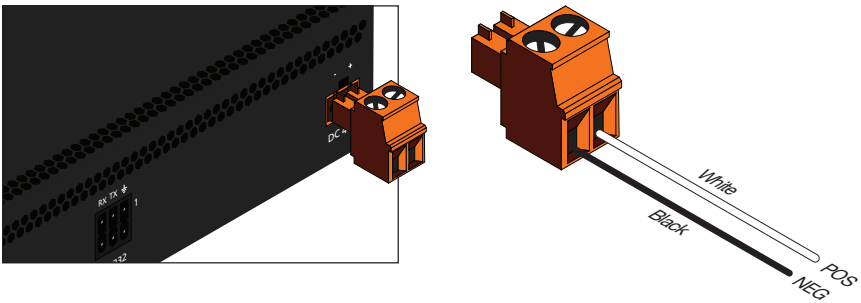

RS-232

The AT-OMNI-111 provides transport of RS-232 protocol over IP which allows communication between a control system and an RS-232 device. This step is optional.

1. Use wire strippers to remove a portion of the cable jacket.
2. Remove at least 3/16" (5 mm) from the insulation of the RX, TX, and GND wires.
3. Insert the TX, RX, and GND wires into correct terminal on the included push spring connector, following the wiring diagram below. If using non-tinned stranded wire, press the orange tab, above the terminal, while inserting the exposed wire.

NOTE: Typical DB9 connectors use pin 2 for TX, pin 3 for RX, and pin 5 for ground. On some devices, the function of pins 2 and 3 are reversed.

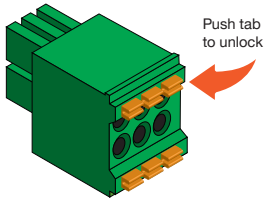

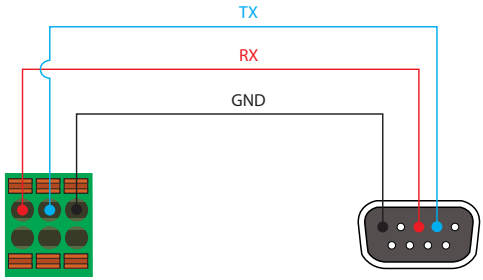

IR

The same port that provides RS-232 connections also supports bidirectional IR pass-through, allowing a device to be controlled from either the headend or the decoder endpoint. This step is optional. IR control is only supported on RS-232 2 port (bottom set of connectors).

IR emitter configuration

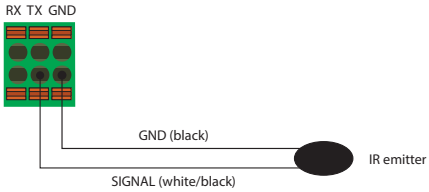

IR extender configuration

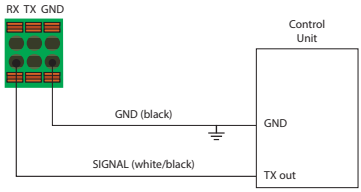

Accessing OmniStream using the built-in Web Server

1. Launch the desired web browser and enter the IP address or domain name of the encoder in the address bar.
2. Enter the username and password. Note that the password field will always be masked. The default credentials are:

   Username: `admin`
   Password: `Atlona`

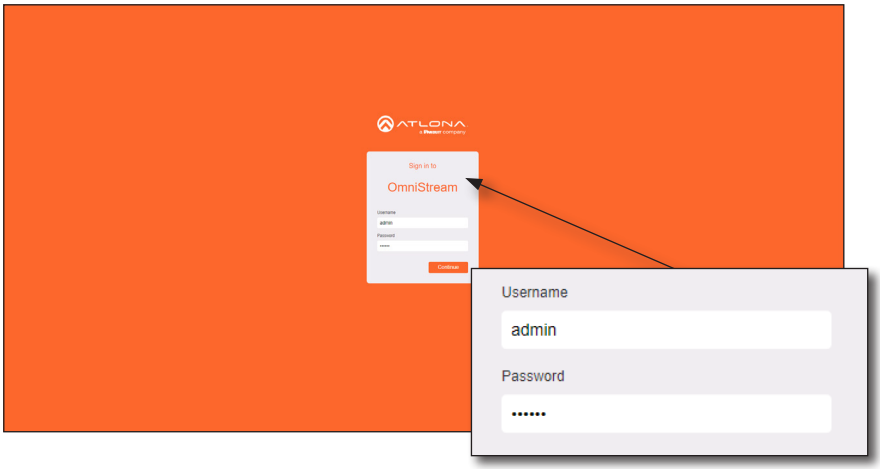

3. The System Information page will be displayed.

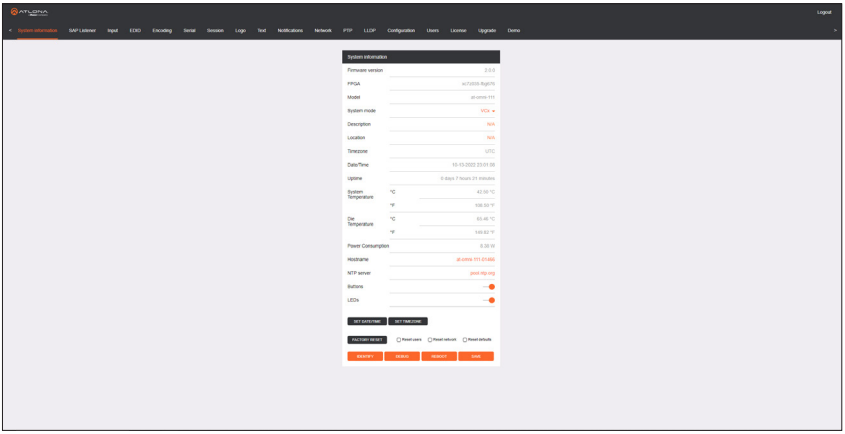

Notes

Version 5

Warranty

To view the product warranty, use the following link or QR code:

https://atlona.com/warranty/.

English Declaration of Conformity

The English version can be found under the resources tab at:

https://atlona.com/product/at-omni-111/.

Chinese Declaration of Conformity 中国RoHS合格声明

由SKU列出於:

https://atlona.com/about-us/china-rohs/.

The terms HDMI, HDMI High-Definition Multimedia Interface, and the HDMI Logo are trademarks or registered trademarks of HDMI licensing Administrator, Inc.

US International
atlona.com • 408.962.0515 • 41.43.508.4321

25200-R5

© 2025 Atlona Inc. All rights reserved. “Atlona” and the Atlona logo are registered trademarks of Atlona Inc. All other brand names and trademarks or registered trademarks are the property of their respective owners. Pricing, specifications and availability subject to change without notice. Actual products, product images, and online product images may vary from images shown here.